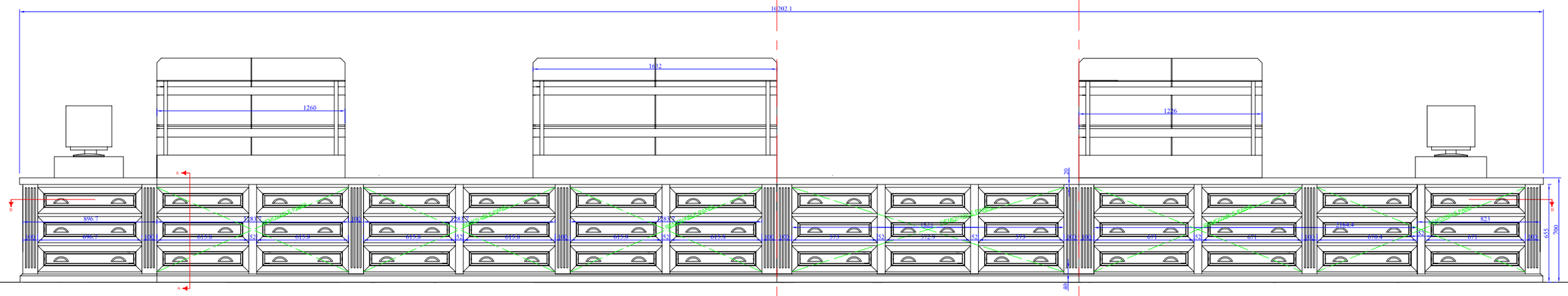

FRONT ELEVATION 1:10 @ AO

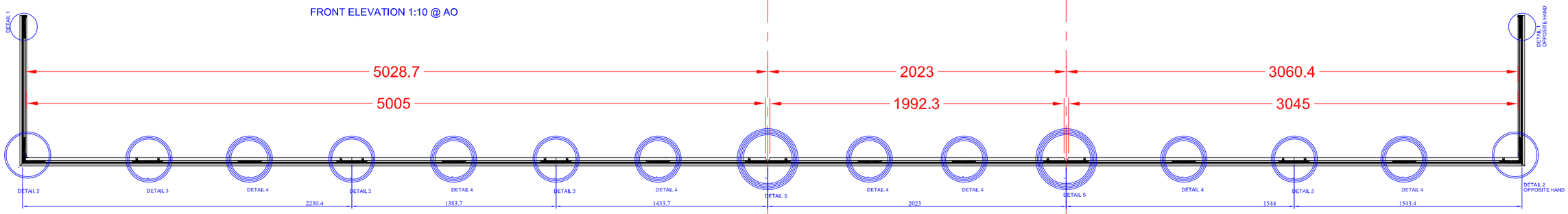

SECTION B-B 1:10 @ AO

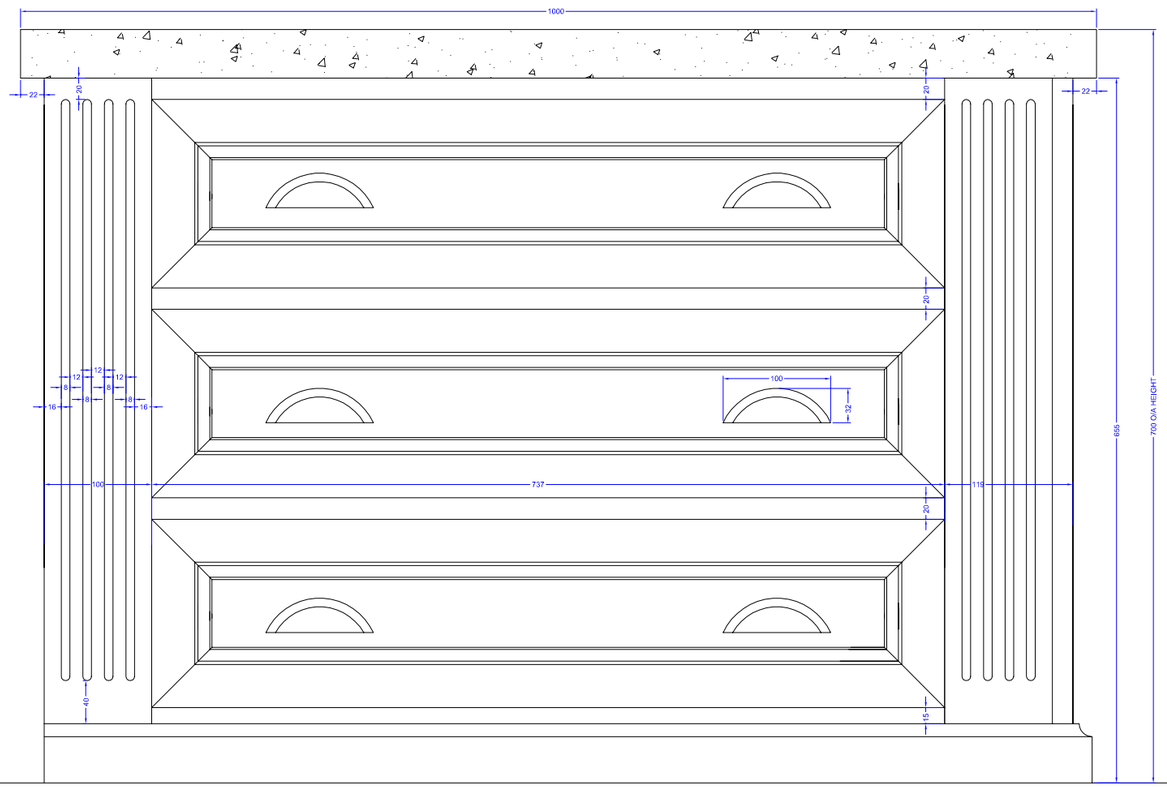

L/H END ELEVATIONS 1:2 @ AO
R/H END ELEVATIONS 1:2 @ AO AS THIS BUT OPPOSITE HAND